DATE	REV	Content of the changes

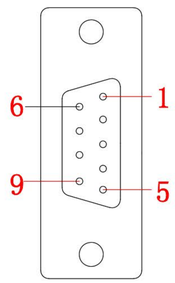

DB9M

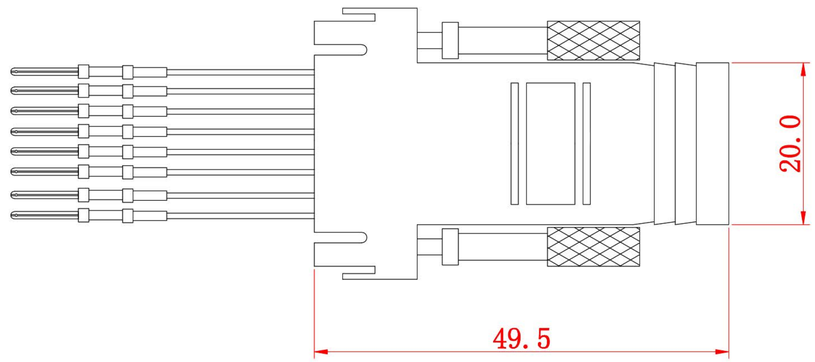

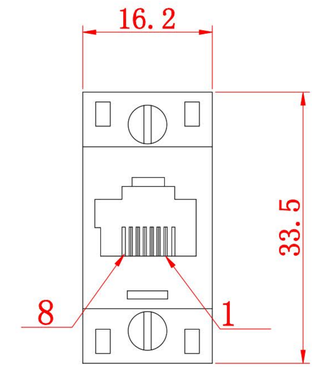

JACK

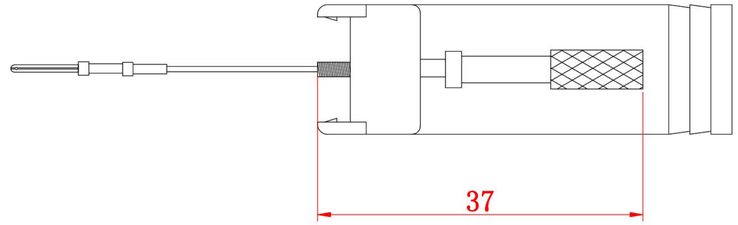

Line gauge	
RJ45	COLOR
1	BLUE
2	ORANGE
3	BLACK
4	RED
5	GREEN
6	YELLOW
7	BROWN
8	WHITE

PART	DESCRIPTION	QTY	MATERIAL
1	HOUSING	1	ABS/GREY
2	INSIDE	1	ABS/GREY
3	GOLD WIRE	8	PHOSPHOR BRONZE
4	GOLD WIRE TERMINAL	8	BRASS
5	HOOK UP WIRE	8	PVC/BRASS
6	SCREW	2	IRON NICKEL PLATING
7	RUBBER CORE	1	DB9M RUBBER CORE /BLACK

客户 CUSTOMER	客户料号 PART NO.	31D1-17200		TOLERANCES UNLESS OTHERWISE STATED	DATE	DRAWING NO		APPROVED BY	CHECKED BY	DRAWN BY
	品名 MODEL	DB 9M 8P8C		X. = ± 1 .X = ± 0.5 .XX ± 0.2	2013-7-1	版次 REVISION	A0			KEVIN