RoHS COMPLIANT

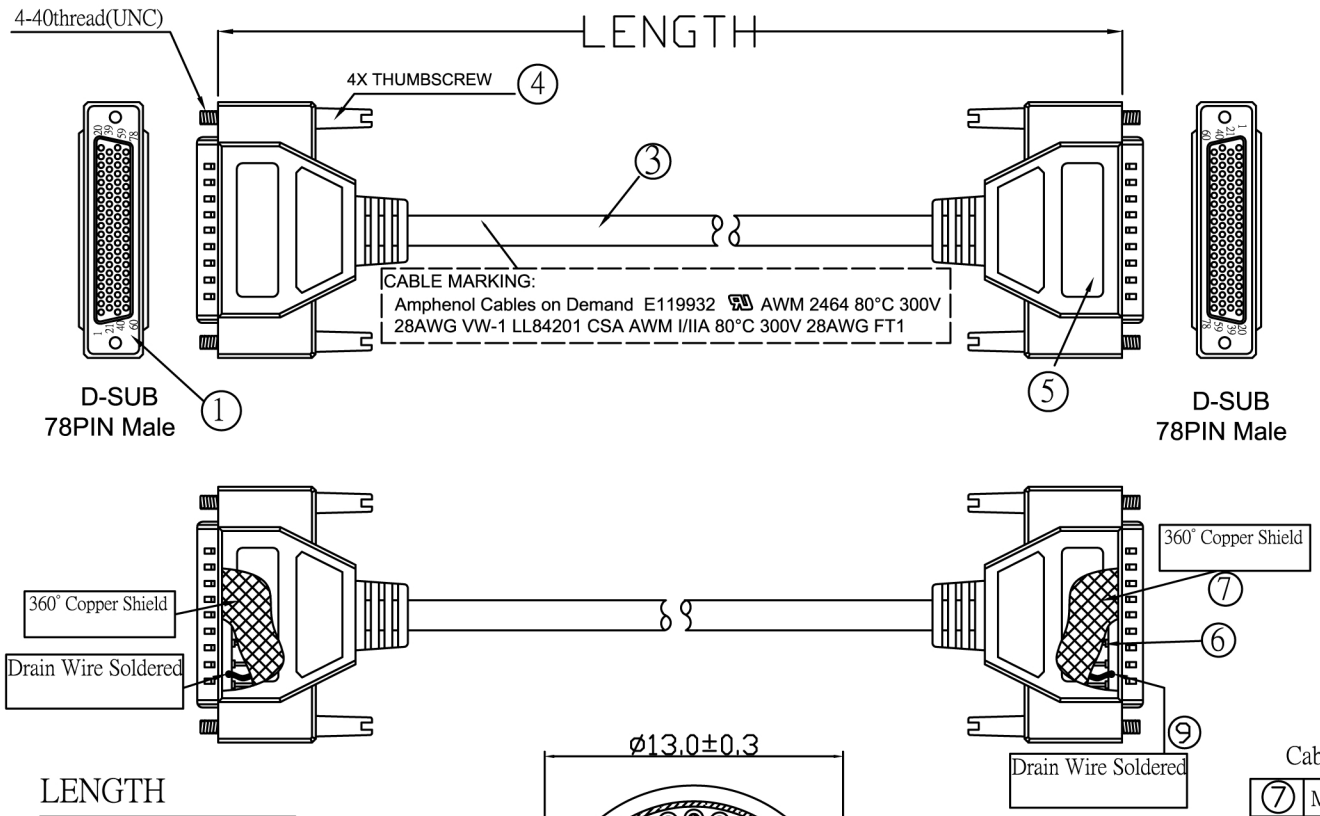

PIN OUT:

Inner Layer Code Male	Male	Color	Middle Layer Code Male	Male	Color	Outer Layer Code Male	Male	Color
PIN1	PIN1	Black	PIN29	PIN29	Black	PIN51	PIN51	Black
PIN2	PIN2	Brown	PIN30	PIN30	Brown	PIN52	PIN52	Brown
PIN3	PIN3	Red	PIN31	PIN31	Red	PIN53	PIN53	Red
PIN4	PIN4	Orange	PIN32	PIN32	Orange	PIN54	PIN54	Orange
PIN5	PIN5	Yellow	PIN33	PIN33	Yellow	PIN55	PIN55	Yellow
PIN6	PIN6	Green	PIN34	PIN34	Green	PIN56	PIN56	Green
PIN7	PIN7	Blue	PIN35	PIN35	Blue	PIN57	PIN57	Blue
PIN8	PIN8	Purple	PIN36	PIN36	Purple	PIN58	PIN58	Purple
PIN9	PIN9	Gray	PIN37	PIN37	Gray	PIN59	PIN59	Gray
PIN10	PIN10	Whie	PIN38	PIN38	Whie	PIN60	PIN60	Whie
PIN11	PIN11	Pink	PIN39	PIN39	Pink	PIN61	PIN61	Pink
PIN12	PIN12	Light Green	PIN40	PIN40	Light Green	PIN62	PIN62	Light Green
PIN13	PIN13	Black/White	PIN41	PIN41	Black/White	PIN63	PIN63	Black/White
PIN14	PIN14	Brown/White	PIN42	PIN42	Brown/White	PIN64	PIN64	Brown/White
PIN15	PIN15	Red/White	PIN43	PIN43	Red/White	PIN65	PIN65	Red/White
PIN16	PIN16	Orange/White	PIN44	PIN44	Orange/White	PIN66	PIN66	Orange/White
PIN17	PIN17	Green/White	PIN45	PIN45	Green/White	PIN67	PIN67	Green/White
PIN18	PIN18	Blue/White	PIN46	PIN46	Blue/White	PIN68	PIN68	Blue/White
PIN19	PIN19	Purple/White	PIN47	PIN47	Purple/White	PIN69	PIN69	Purple/White
PIN20	PIN20	Red/Black	PIN48	PIN48	Red/Black	PIN70	PIN70	Red/Black
PIN21	PIN21	Orange/Black	PIN49	PIN49	Orange/Black	PIN71	PIN71	Orange/Black
PIN22	PIN22	Yellow/Black	PIN50	PIN50	Yellow/Black	PIN72	PIN72	Yellow/Black
PIN23	PIN23	Green/Black				PIN73	PIN73	Green/Black
PIN24	PIN24	Gray/Black				PIN74	PIN74	Gray/Black
PIN25	PIN25	Pink/Black				PIN75	PIN75	Pink/Black
PIN26	PIN26	Pink/Red				PIN76	PIN76	Pink/Red
PIN27	PIN27	Pink/Blue				PIN77	PIN77	Pink/Blue
PIN28	PIN28	Pink/Green				PIN78	PIN78	Pink/Green
						SHIELD	SHIELD	Drain Wire

LENGTH

LENGTH
750±30mm
1000±30mm
1500±30mm
2000±50mm
3000±50mm
4000±50mm
5000±100mm
7500±150mm
10000±200mm

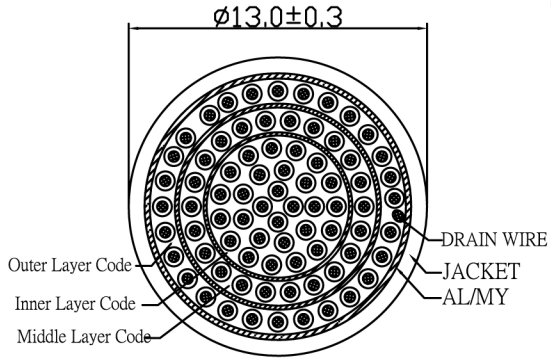

SEC A-A

Cable Color: Gray(BN:HF)

NO.	NAME	MATERIAL	SPECIFICATION	QT'Y	REMARK
7	Metal Foil	Copper	28X140X0.08mm	2	ZFCUSAX05
6	Heat Shrink Tube	EVA	ø1.5X10mm	156	ZR10.0BK
5	SR	PVC	Gray(BN:HF) UL94V-0	2	PLHPEXXIO2NXX PLPVCXXHF2N35
4	THUMBSCREW	PC/STEEL	# 4-40thread,Nickel Plated	4	ZTADSUB05
3	CABLE	PVC	UL2464 78C 28AWG DRAIN+AL/MY	1	TC78D28XXXCXX508
2	Heat Shrink Tube	EVA	ø1.5X30mm	2	ZR1.5X30BK
1	CONNECTOR	Copper alloy	78PIN Male , Nickel Plated, Gold Flash	2	ZDS78MXXXHDX

APPD.		P/N.	TL2G78C28HF1CK52-XXX-G
CHKD.		FILE	TLXX78C28XXXCK52-SC.DWG
DR.		TITLE	Deluxe Hingh Density 78PIN D-Sub MM

HD78/78MM-xxx

SCALE	/	SIZE	A4
UNIT	MM	REV.	A

REV.	DESCRIPTION	DATE	ENG.	APPROVAL