UNC #4-40 Hexscrew

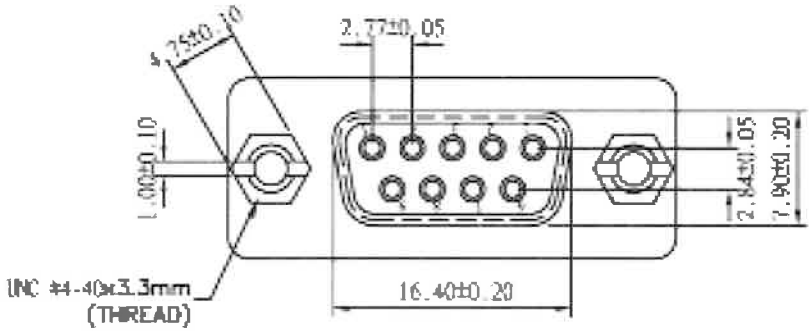

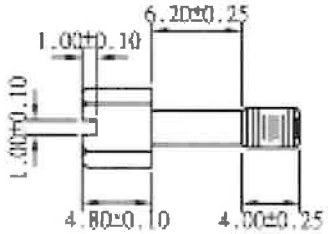

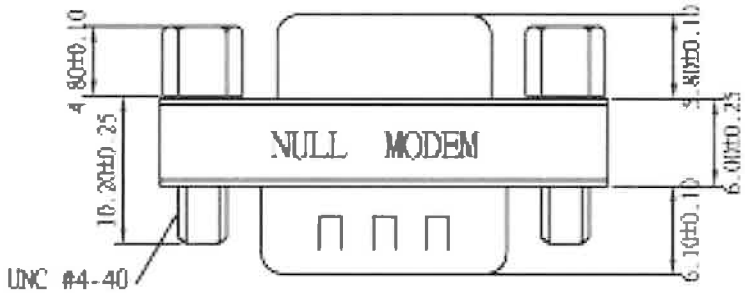

MA 005A (DB9M/F ADAPTOR)

PIN OUT: 09Male 09Female

2	----------	3
3	----------	2
4	----------	1
	------	6
5	----------	5
1	----------	4
6	------	
7	----------	8
8	----------	7
G	----------	G

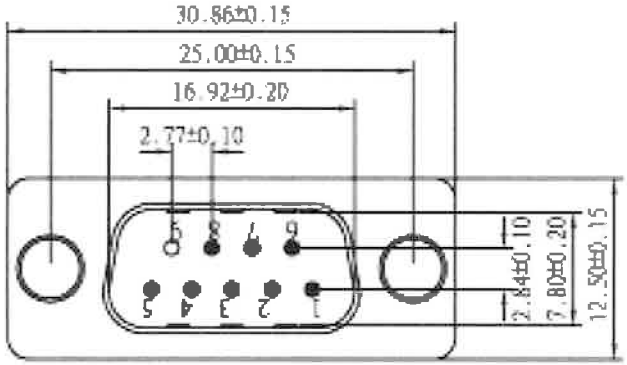

Label:orange color with white character
One side: NULL MODEM
The other side:MINI ADAPTER
SPECIFICATION
INSULATOR:PBT Glass fibre reinforced UL 94 V0(black)
CONTACT:Brass
CONTACT PLATING:Gold plated over nickel
SHELL: Tin plated shell

Customer	REVISION	DESCRIPTION	DATE								
				Edition A3							
				SCALE 2:1		MNM09MF			DWG NO. TM0059-04	DATE 2007/08/20	
				UNIT mm							
				Page 1/1		DRAWN	Fu Hao	CHECKED		APPRD	